Standard Wood Railing

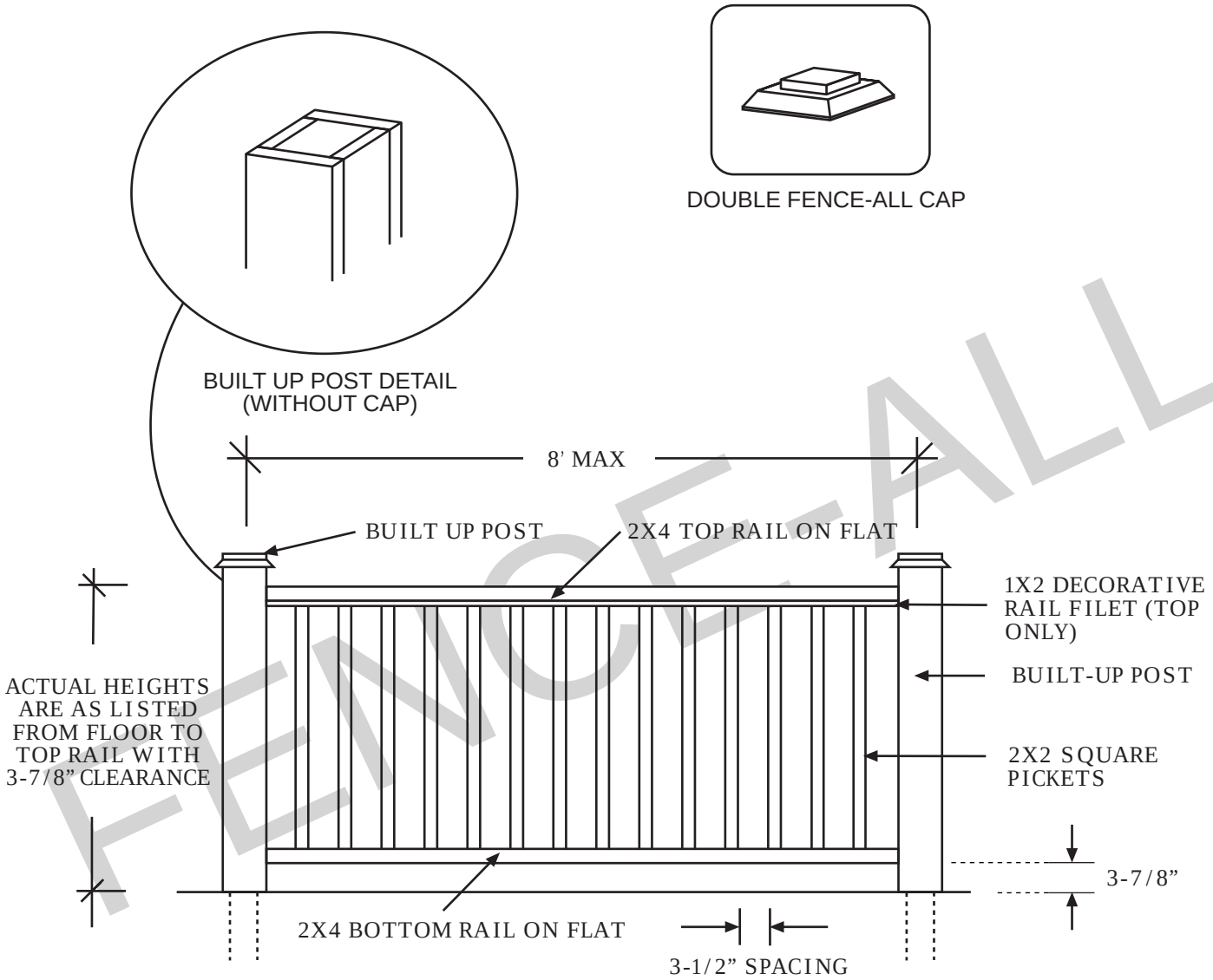

FRONT VIEW

FENCE-ALL

NOTES:
- all dimensions are nominal
- we reserve the right to make changes or improvements to our designs without notice

©2015 Fence-All
All rights reserved.