Bel Air w/Byron Pattern Vinyl/PVC

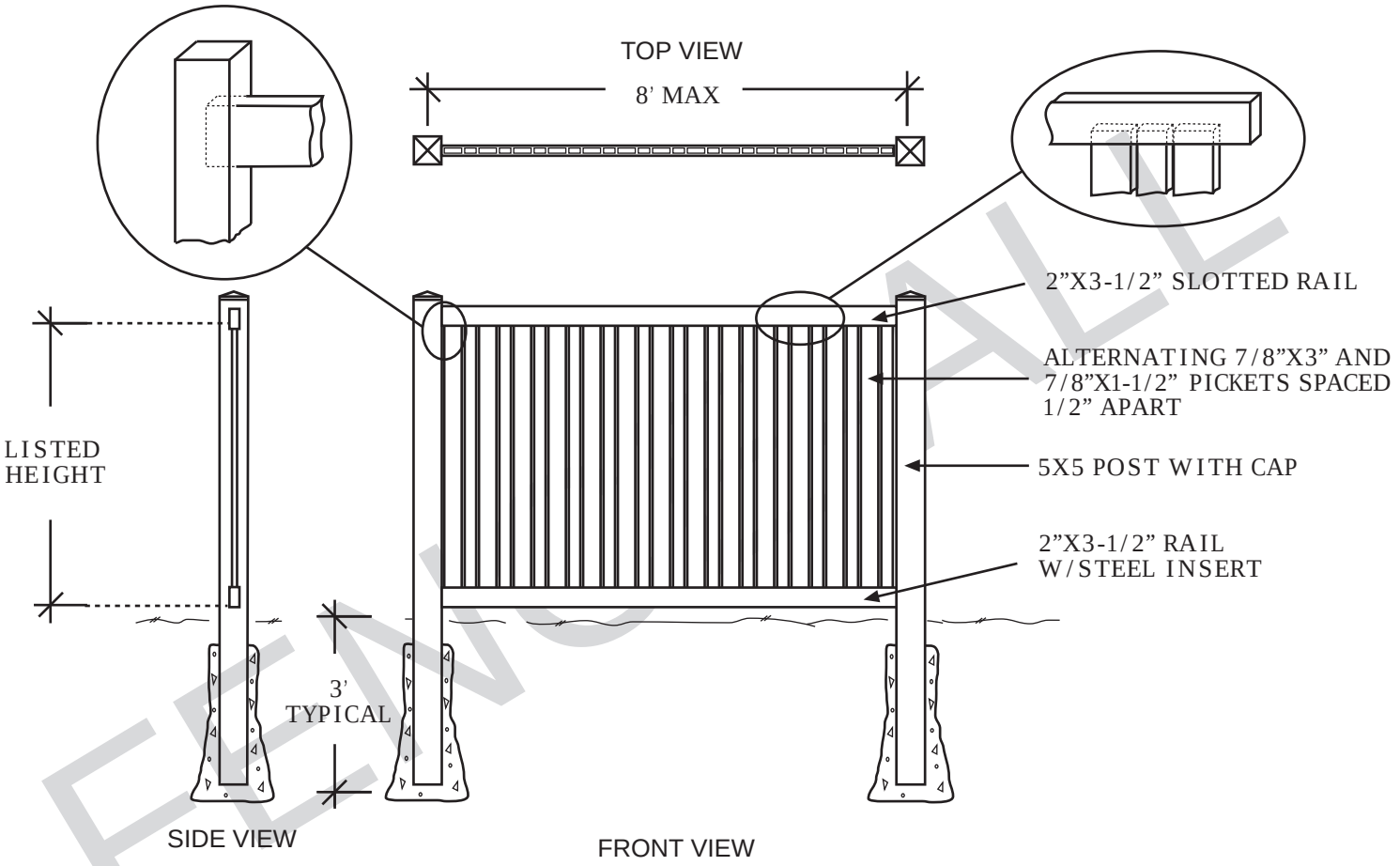

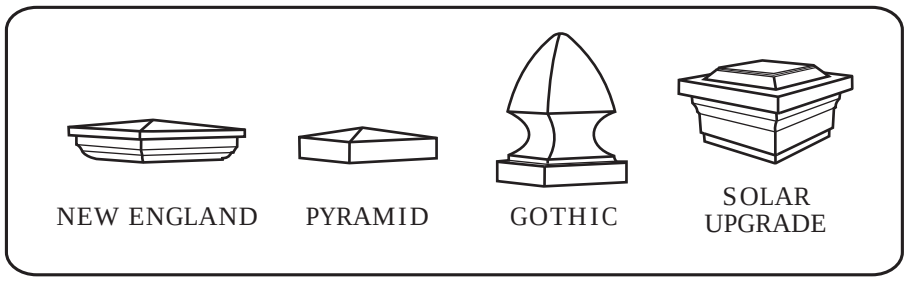

CHOICE OF CAP

NOTES:
- All dimensions are nominal.
- Clearance below the fence isn't included in height calculations.
- We reserve the right to make changes or improvements to our designs without notice.

©2021 Fence-All
All rights reserved.

Bel Air w/Byron Pattern Vinyl/PVC Gate

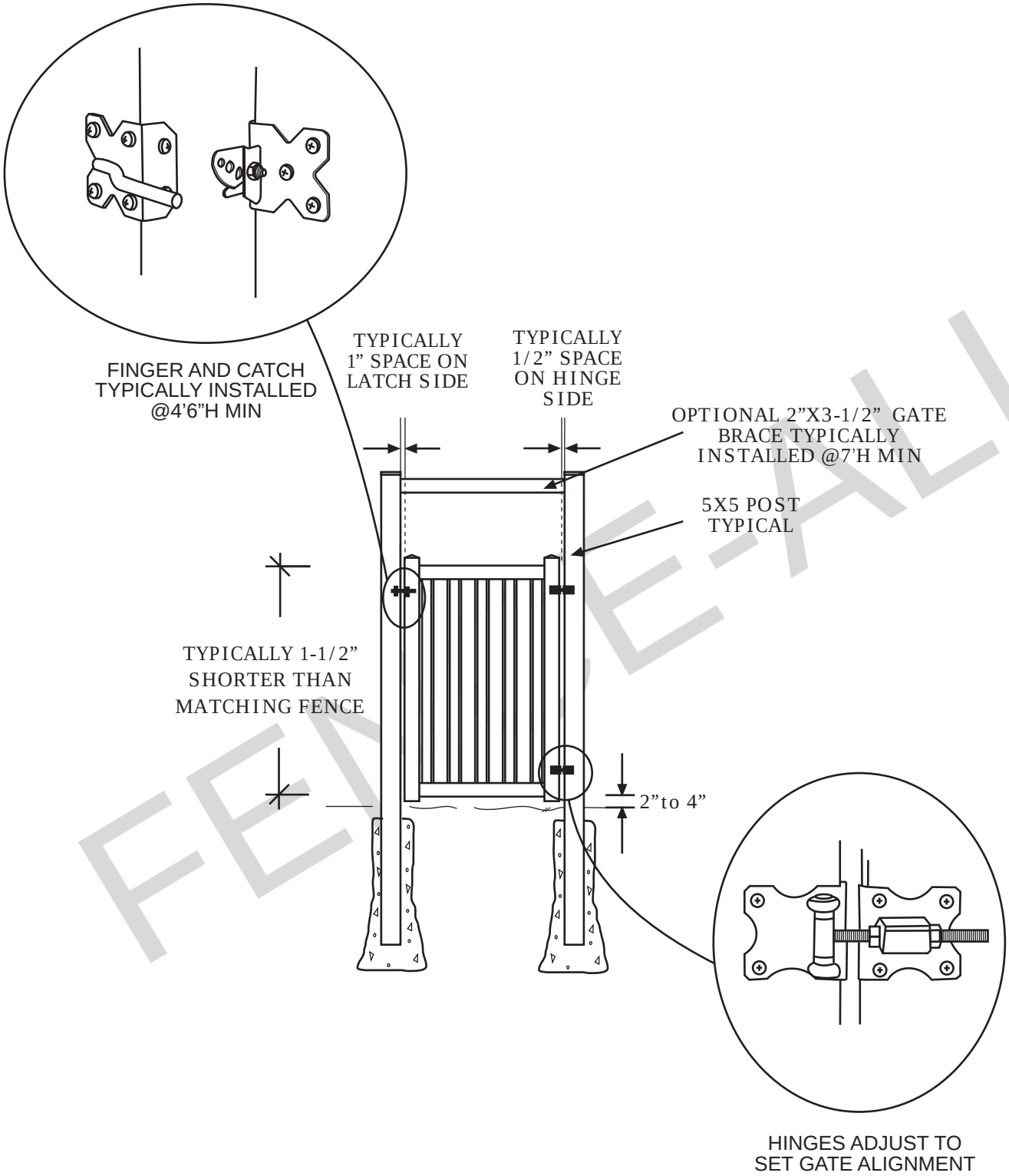

NOTES:
- All dimensions are nominal.
- Clearance below the fence isn't included in height calculations.
- We reserve the right to make changes or improvements to our designs without notice.

©2021 Fence-All
All rights reserved.